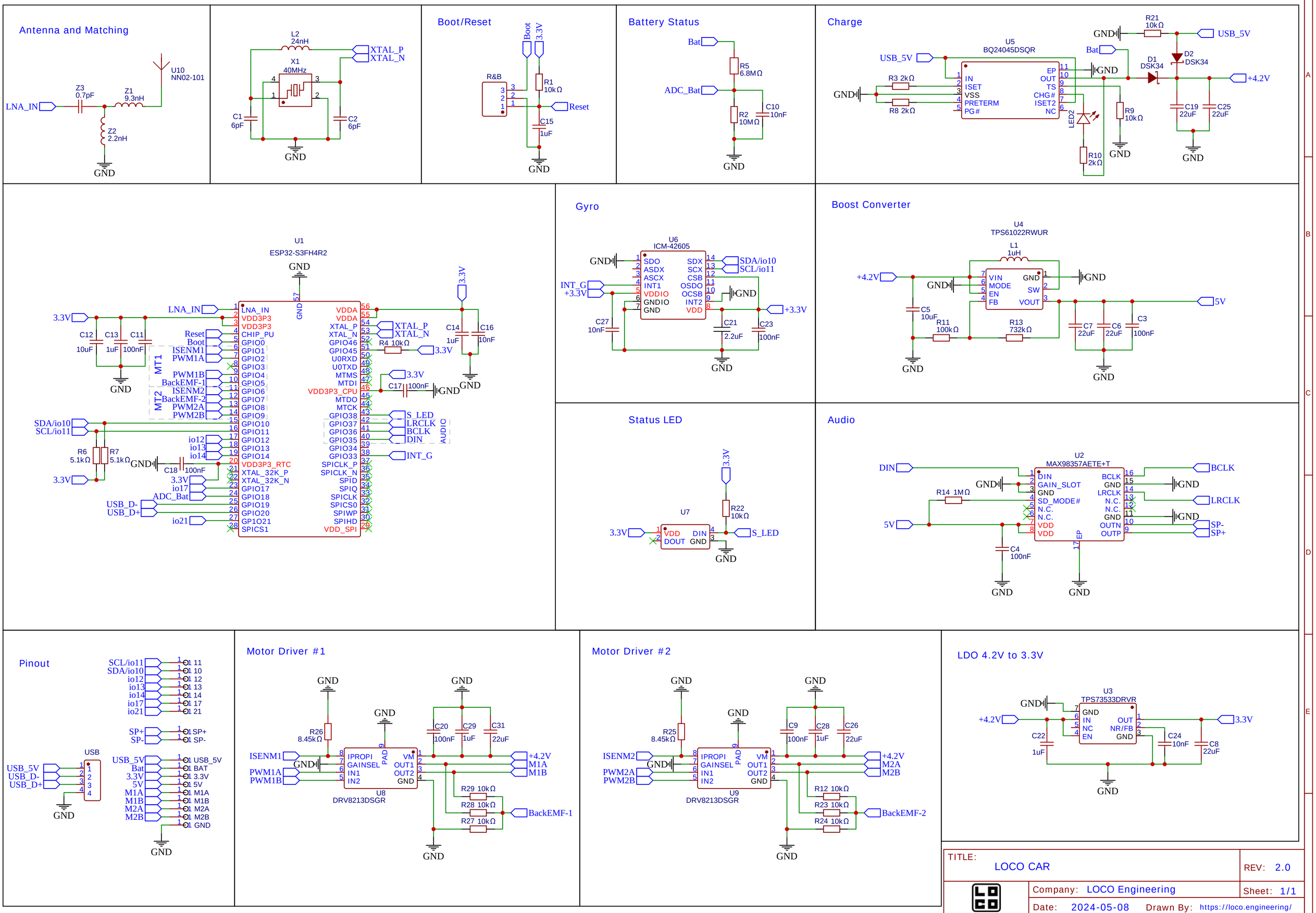
Antenna and Matching
U10
NN02-101
Z3
0.7pF
Z1
9.3nH
Z2
2.2nH
LNA_IN
GND
L2
24nH
X1
40MHz
C1
6pF
C2
6pF
XTAL_P
XTAL_N
Boot/Reset
R&B
Boot
3.3V
R1
10kΩ
Reset
C15
1uF
Battery Status
Bat
R5
6.8MΩ
ADC_Bat
R2
10MΩ
C10
10nF
Charge
U5
BQ24045DSQR
USB_5V
R3 2kΩ
R8 2kΩ
IN
ISET
VSS
PRETERM
PG#
EP
OUT
TS
CHG#
ISET2
NC
R21
10kΩ
D1
DSK34
D2
DSK34
+4.2V
LED2
R9
10kΩ
R10
2kΩ
C19
22uF
C25
22uF
U1
ESP32-S3FH4R2
LNA_IN
VDD3P3
VDD3P3
CHIP_PU
GPIO0
GPIO1
GPIO2
GPIO3
GPIO4
GPIO5
GPIO6
GPIO7
GPIO8
GPIO9
GPIO10
GPIO11
GPIO12
GPIO13
GPIO14
VDD3P3_RTC
XTAL_32K_P
XTAL_32K_N
GPIO17
GPIO18
GPIO19
GPIO20
GP1O21
SPICS1
VDDA
VDDA
XTAL_P
XTAL_N
GPIO46
GPIO45
U0RXD
U0TXD
MTMS
MTDI
VDD3P3_CPU
MTDO
MTCK
GPIO38
GPIO37
GPIO36
GPIO35
GPIO34
GPIO33
SPICLK_P
SPICLK_N
SPID
SPIQ
SPICLK
SPICS0
SPIWP
SPIHD
VDD_SPI
Reset
Boot
ISENM1
PWM1A
PWM1B
BackEMF-1
ISENM2
BackEMF-2
PWM2A
PWM2B
MT1
MT2
SDA/io10
SCL/io11
io12
io13
io14
io17
ADC_Bat
USB_D-
USB_D+
io21
R4 10kΩ
C14
1uF
C16
10nF
C17
100nF
C18
100nF
C11
100nF
C12
10uF
C13
1uF
R6
5.1kΩ
R7
5.1kΩ
S_LED
LRCLK
BCLK
DIN
AUDIO
INT_G
Gyro
U6
ICM-42605
SDO
ASDX
ASCX
INT1
VDDIO
GNDIO
GND
SDX
SCX
CSB
OSDO
OCSB
INT2
VDD
SDA/io10
SCL/io11
INT_G
+3.3V
C27
10nF
C21
2.2uF
C23
100nF
Boost Converter
U4
TPS61022RWUR
L1
1uH
+4.2V
VIN
MODE
EN
FB
GND
SW
VOUT
5V
C5
10uF
R11
100kΩ
R13
732kΩ
C7
22uF
C6
22uF
C3
100nF
Status LED
U7
VDD
DOUT
DIN
GND
R22
10kΩ
S_LED
Audio
U2
MAX98357AETE+T
DIN
GAIN_SLOT
SD_MODE#
N.C.
VDD
BCLK
LRCLK
OUTN
OUTP
R14 1MΩ
5V
C4
100nF
SP-
SP+
Pinout
SCL/io11
SDA/io10
io12
io13
io14
io17
io21
SP+
SP-
USB
USB_5V
USB_D-
USB_D+
Bat
3.3V
5V
M1A
M1B
M2A
M2B
Motor Driver #1
U8
DRV8213DSGR
IPROPI
GAINSEL
IN1
IN2
PAD
VM
OUT1
OUT2
R26
8.45kΩ
C20
100nF
C29
1uF
C31
22uF
R29 10kΩ
R28 10kΩ
R27 10kΩ
Motor Driver #2
U9
DRV8213DSGR
R25
8.45kΩ
C9
100nF
C28
1uF
C26
22uF
R12 10kΩ
R23 10kΩ
R24 10kΩ
LDO 4.2V to 3.3V
U3
TPS73533DRVR
GND
IN
NC
EN
OUT
NR/FB
C22
1uF
C24
10nF
C8
22uF
TITLE:
LOCO CAR
REV: 2.0
Company: LOCO Engineering
Sheet: 1/1
Date: 2024-05-08
Drawn By: https://loco.engineering/